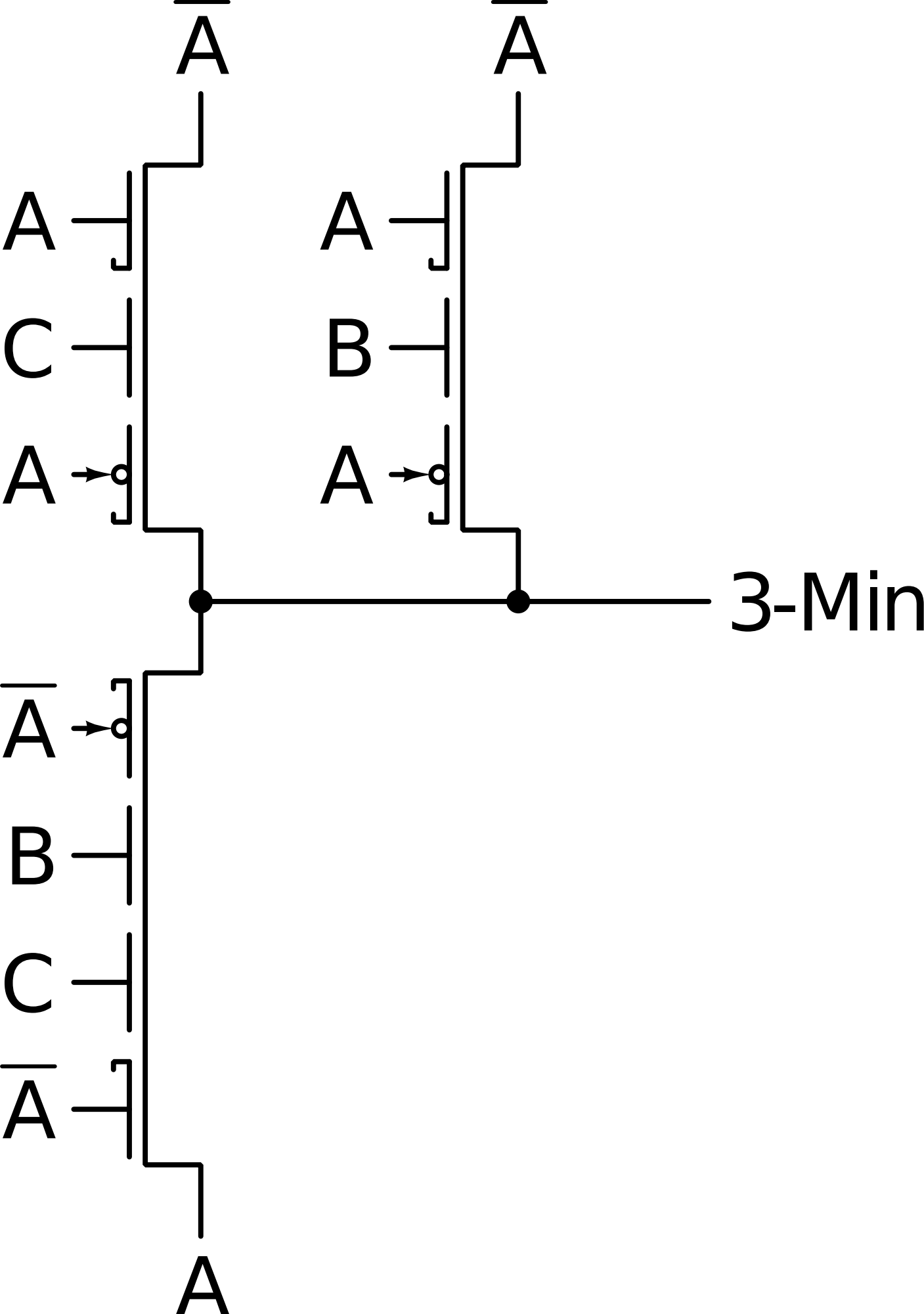
A
A
A
C
A
A
B
A
3-Min
A
B
C
A
A