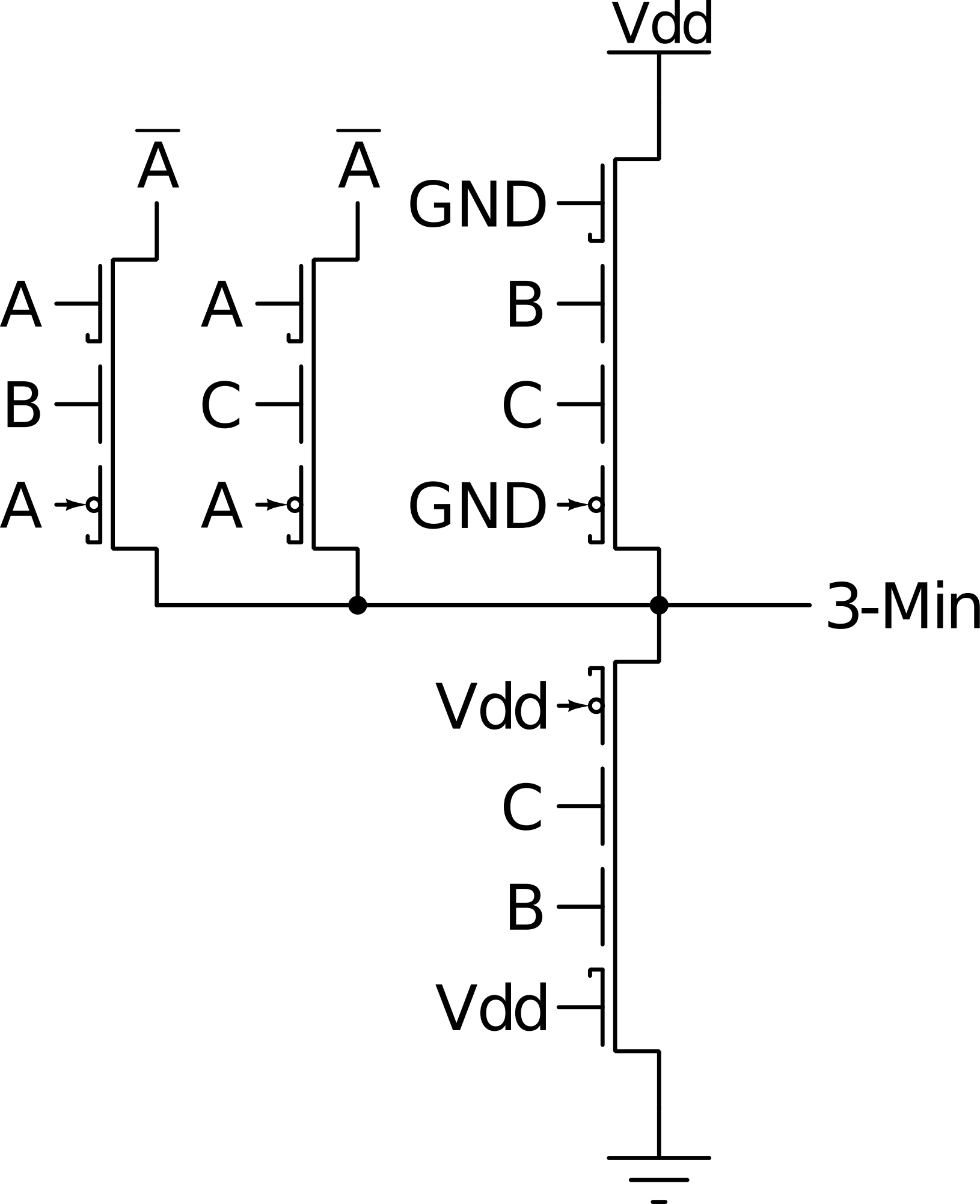
Vdd
$\overline{A}$
$\overline{A}$
GND
A
A
B
B
C
C
A
A
GND
3-Min
Vdd
C
B
Vdd