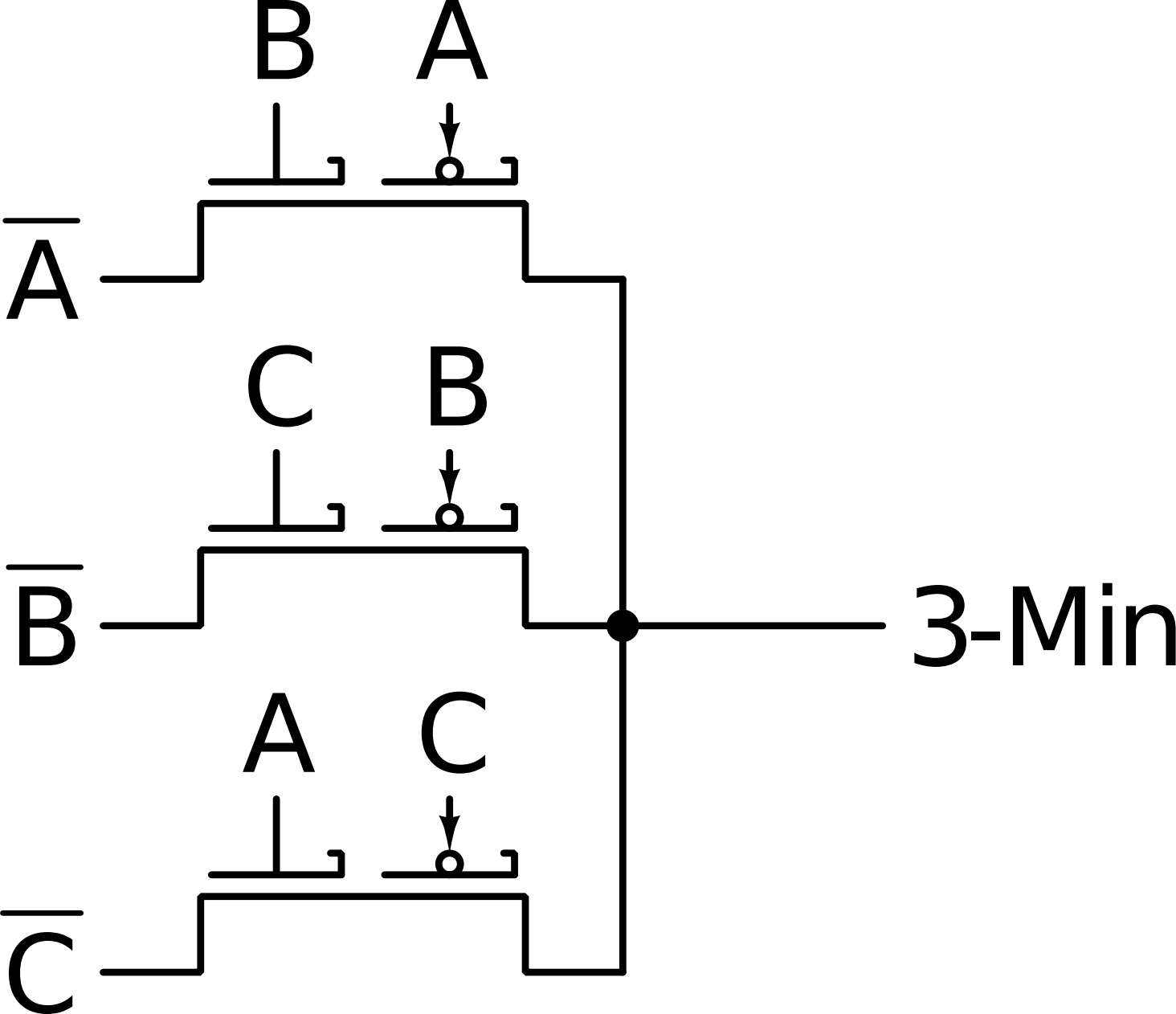
B
A
$\overline{A}$
C
B
$\overline{B}$
3-Min
A
C
$\overline{C}$