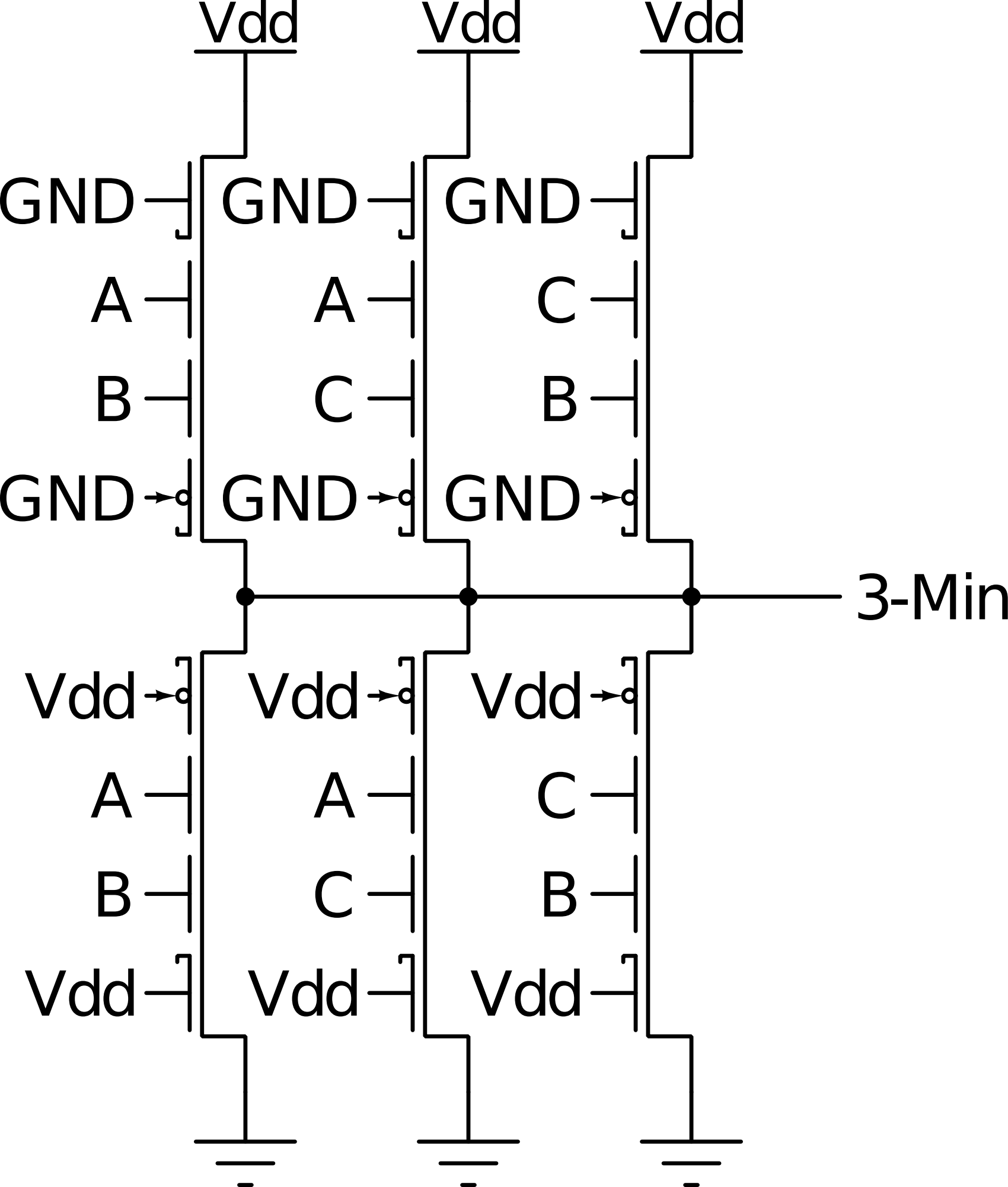
Vdd
Vdd
Vdd
GND
GND
GND
A
A
C
B
C
B
GND
GND
GND
3-Min
Vdd
Vdd
Vdd
A
A
C
B
C
B
Vdd
Vdd
Vdd